

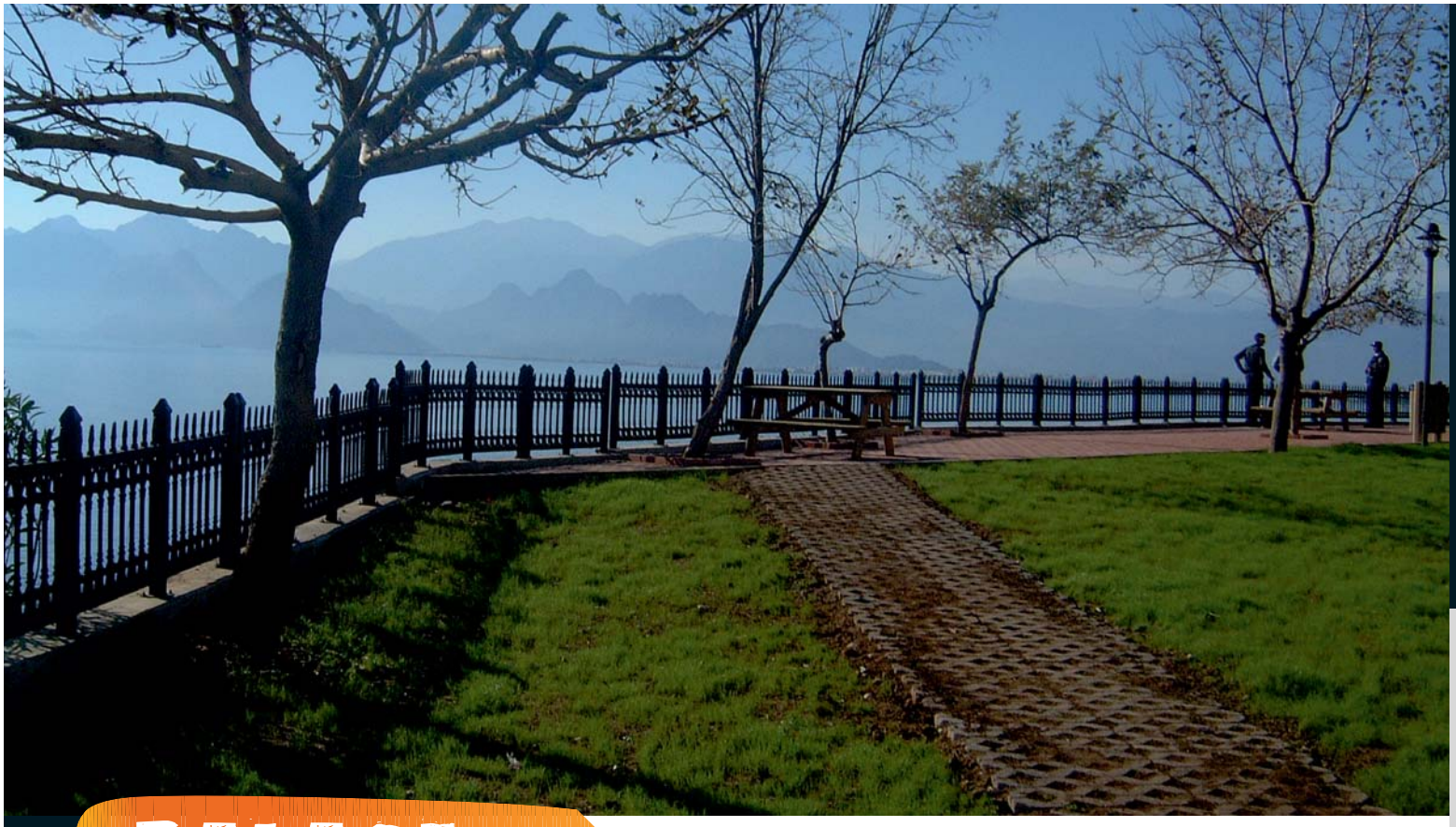

PALACE





MODEL	: Palace		
HEIGHT	: 80 cm	BOY	: 80 cm
COLOUR	: Black / Beige	RENK	: Siyah / Bej

MODEL PALACE

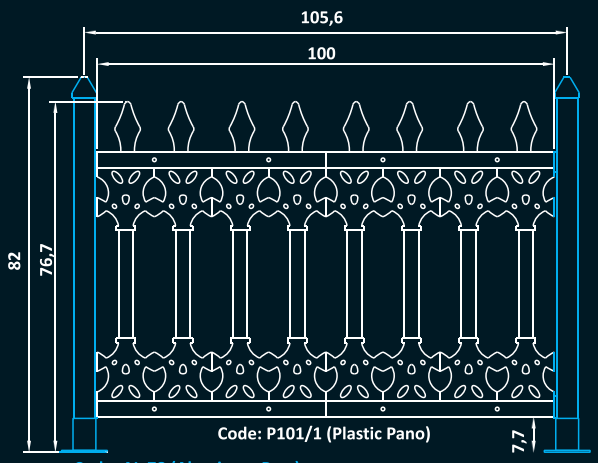

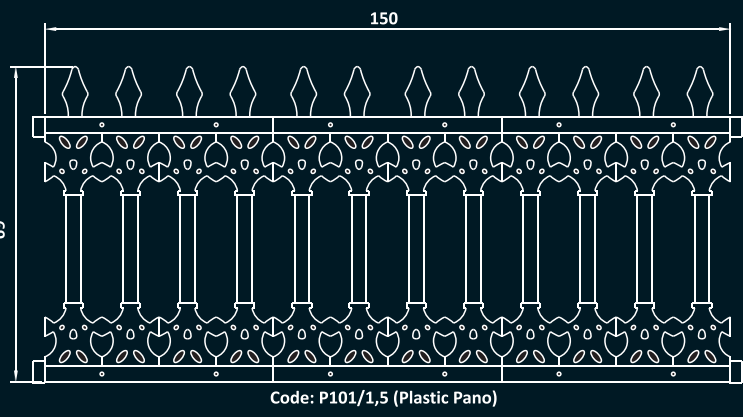









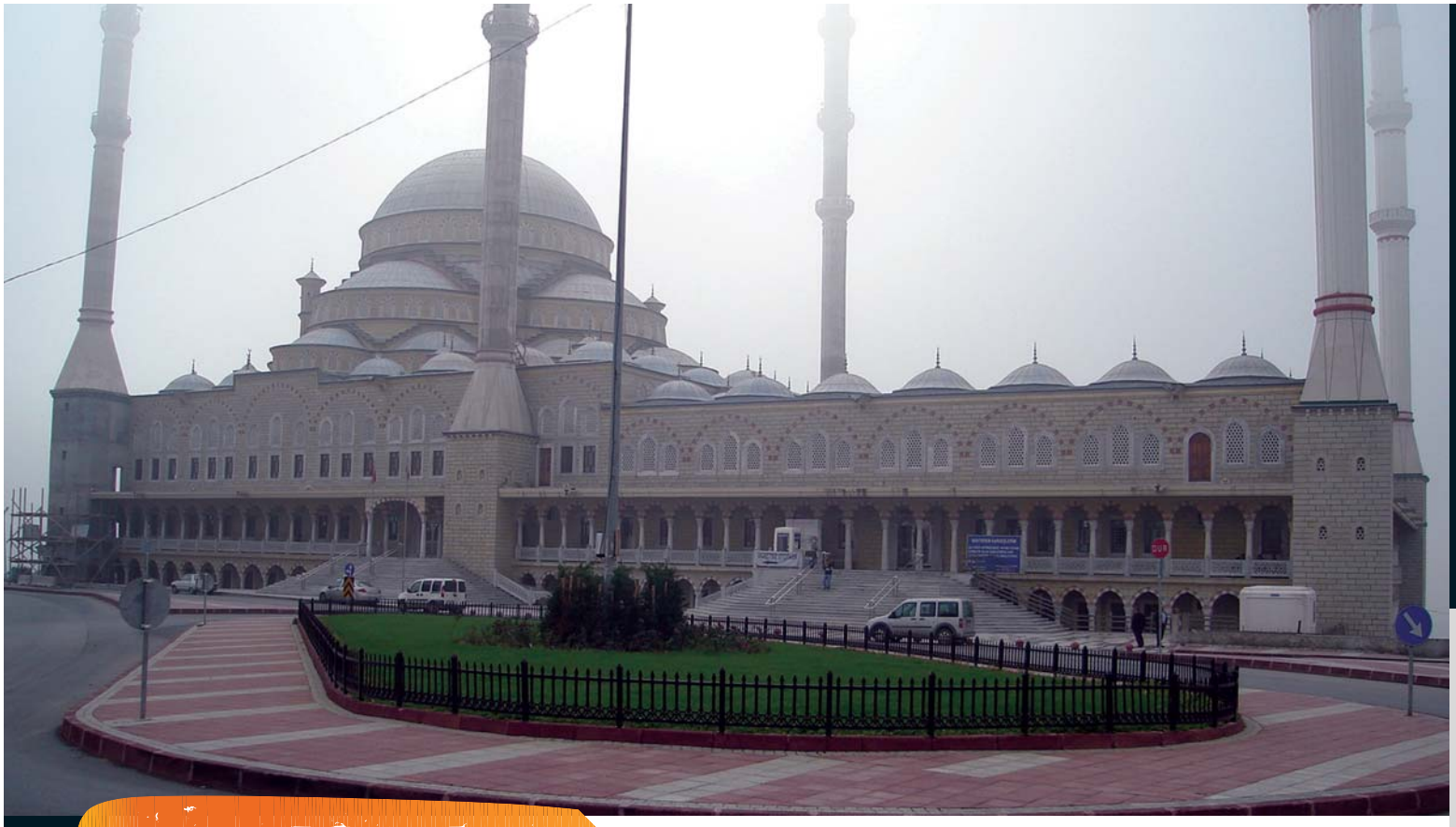

RESIDENCE





MODEL : **Residence**

HEIGHT : 60 cm
COLOUR : Black / Beige

BOY : 60 cm
RENK : Siyah / Bej

MODEL RESIDENCE

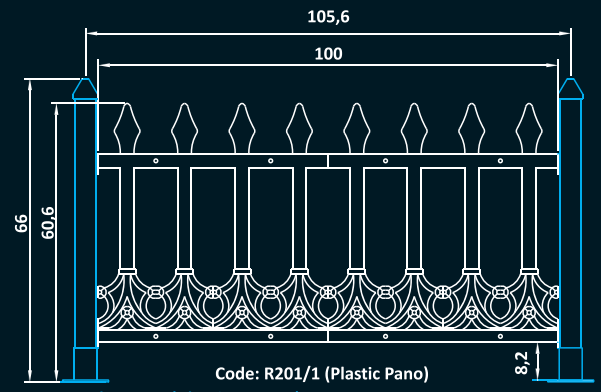

Code: R201/1 (Plastic Pano)

Code: AL-62 (Aluminum Post)

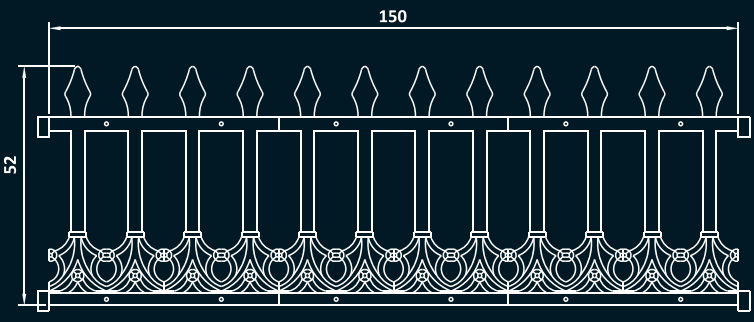

Code: R201/1,5 (Plastic Pano)











VERANDA





MODEL **Veranda**

HEIGHT : 60 cm
COLOUR : Black / Beige

BOY : 60 cm
RENK : Siyah / Bej

MODEL VERANDA

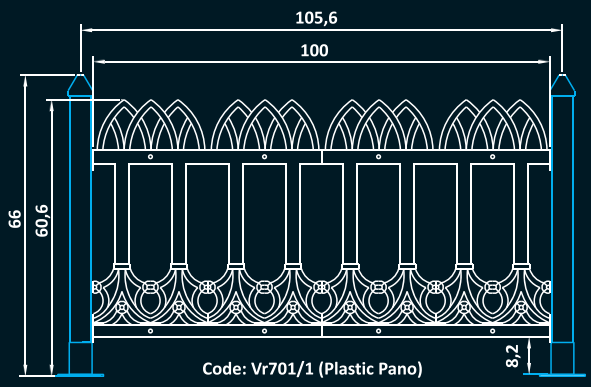

Code: Vr701/1 (Plastic Pano)

Code: AL-62 (Aluminum Post)

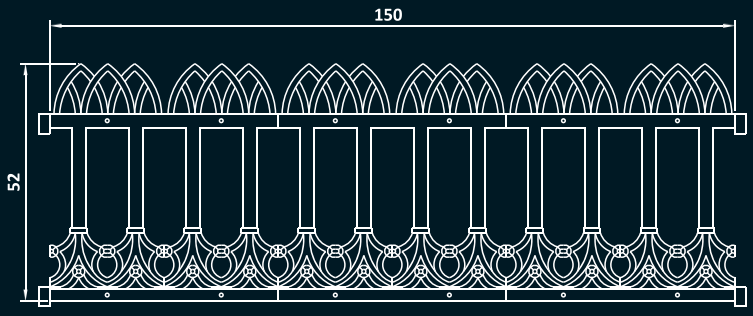

Code: Vr701/1,5 (Plastic Pano)









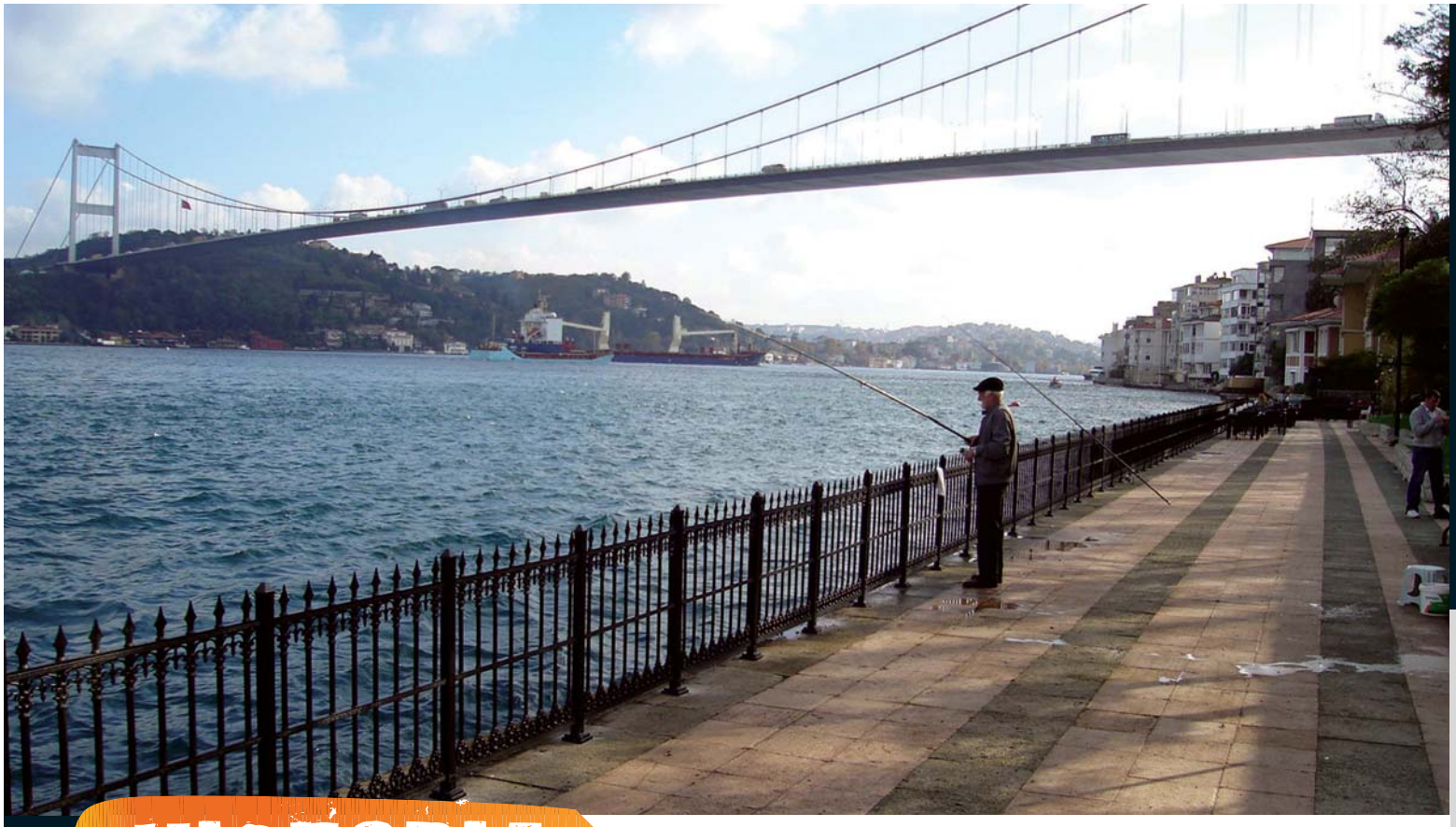

VICTORIA





MODEL : Victoria
HEIGHT : 100 cm
COLOUR : Black / Beige

BOY : 100 cm
RENK : Siyah / Bej

MODEL VICTORIA

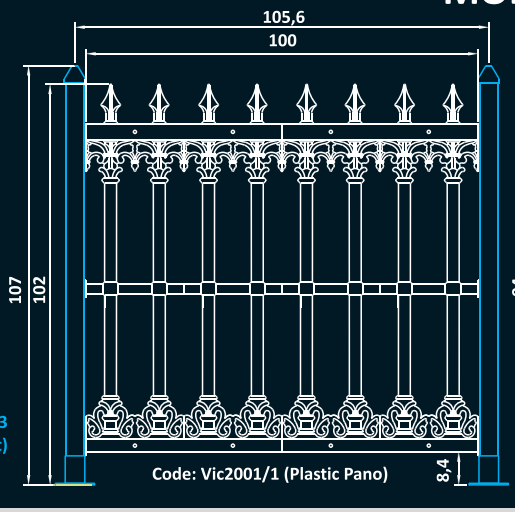

Code: AL-103
(Aluminum Post)

Code: Vic2001/1 (Plastic Pano)

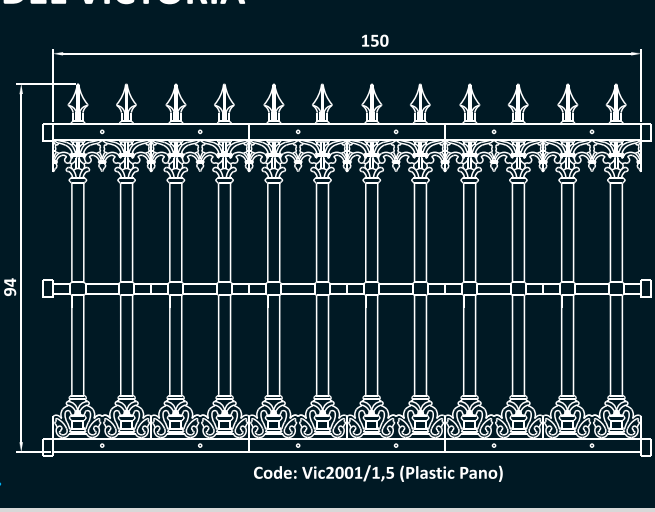

Code: Vic2001/1,5 (Plastic Pano)











VALENCIA





MODEL : Victoria
HEIGHT : 100 cm
COLOUR : Black / Beige

BOY : 100 cm
RENK : Siyah / Bej

MODEL VALENCIA

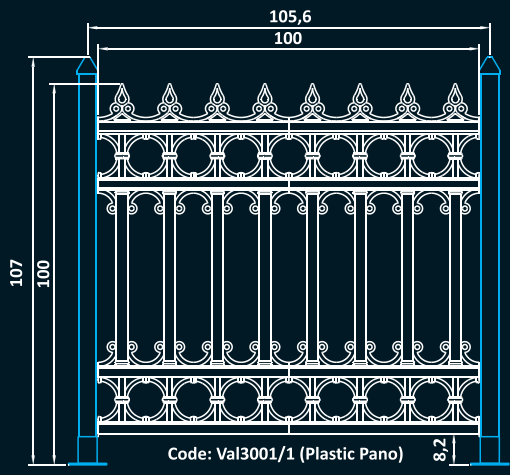

Code: AL-103
(Aluminum Post)

Code: Val3001/1 (Plastic Pano)

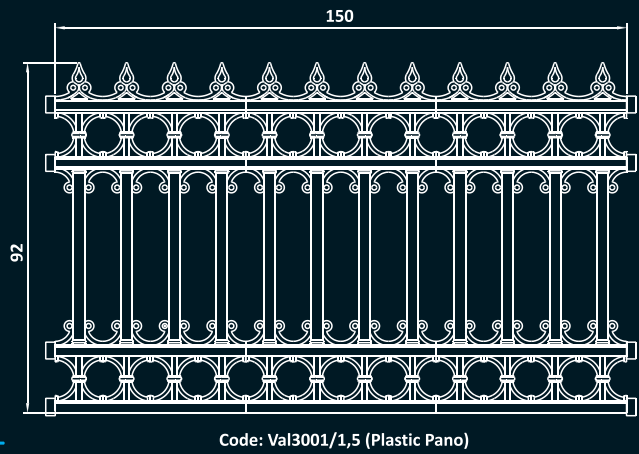

Code: Val3001/1,5 (Plastic Pano)











BAHÇE KENARLIKLARI
GARDEN BORDERS







Model Lale / Tulip



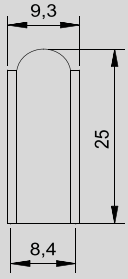

12 Ad: 1 m
12 Pcs: 1m

Code: C25

Model Çam / Pine



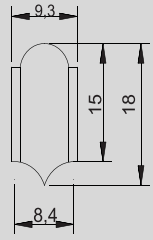

12 Ad: 1 m
12 Pcs: 1m

Code: C18

Model Lale / Tulip (kısa / short)



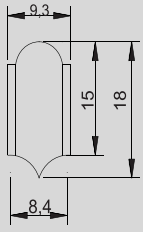

12 Ad: 1 m
12 Pcs: 1m

Code: C18-T

Model Tuğla / Brick



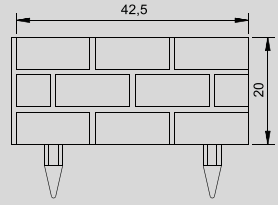

4 Ad: 1 Kare
4 Pcs: 1 Square

Code: C20

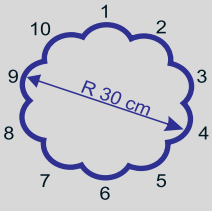

Dairesel Uygulamalarda
Çap / Modül Oranı
Diameter / Module ratio
in circular applications

30 cm	10 Ad/Pcs
40 cm	14 Ad/Pcs
50 cm	18 Ad/Pcs
60 cm	22 Ad/Pcs
70 cm	26 Ad/Pcs
80 cm	30 Ad/Pcs
90 cm	34 Ad/Pcs

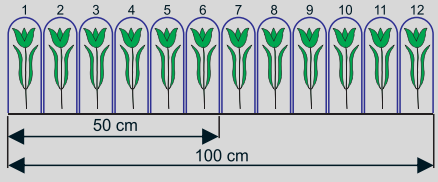

Doğrusal Uygulamalarda
Uzunluk / Modül Oranı
Lenght / Module ratio
in linear applications

50 cm	6 Ad/Pcs
100 cm	12 Ad/Pcs
150 cm	18 Ad/Pcs
200 cm	24 Ad/Pcs
250 cm	30 Ad/Pcs
300 cm	36 Ad/Pcs
350 cm	42 Ad/Pcs

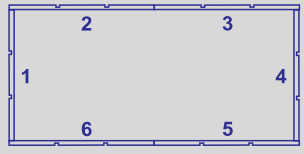

Dikdörtgen Uygulama
Rectagular application

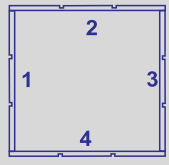

Kare Uygulama
Square application

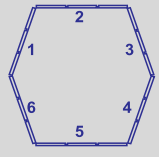

Altıgen / Çokgen Uygulama
Hexagonal / Polygonal application